FINAL PUBLISHABLE REPORT

Grant Agreement number	17NMR03
Project short name:	EUCoM
Project full title:	Standards for the evaluation of the uncertainty of coordinate measurements in industry

Project start date and duration:	01 June 2018, 42 months	
Coordinator: Alessandro Balsamo, INRIM Tel: +39 011 3919-970 E-mail: a.balsamo@inrim.it Project website address: eucom-empir.eu		
Chief Stakeholder Organisation: ŠKODA AUTO a.s.	Chief Stakeholder Contact: David Macoun	
Internal Funded Partners: 1 INRIM. Italy 2 CMI, Czech Republic 3 DTI, Denmark 4 GUM, Poland 5 Metrosert, Estonia 6 NPL, United Kingdom 7 PTB, Germany 8 TUBITAK, Turkey	External Funded Partners: 9 ATH, Poland 10 TEKNIKER, Spain 11 UNIPD, Italy	Unfunded Partners: 12 AIST, Japan
RMG: -		

Report Status: PU Public

This publication reflects only the author's view and the Commission is not responsible for any use that may be made of the information it contains.

The EMPIR initiative is co-funded by the European Union's Horizon 2020 research and innovation programme and the EMPIR Participating States

TABLE OF CONTENTS

1 Overview 3
2 Need 3
3 Objectives 3
4 Results 5
4.1 Objective 1: To develop traceable and standardised methods for evaluating the uncertainty of coordinate measurements a posteriori using type A evaluation 5
4.2 Objective 2: To develop a simplified and validated method for predicting the uncertainty of coordinate measurements a priori using type B evaluation (i.e. expert judgement) 11
4.3 Objective 3: To demonstrate the validity of existing methods and those from objective 1 & 2 in industrial conditions and evaluate their consistency and accuracy against the Guide to the Expression of Uncertainty in Measurement (GUM) and its supplements 17
5 Impact 24
6 List of publications 25
7 Contact details 26

1 Overview

Evaluating measurement uncertainty during inspections is key for verifying the conformity of parts with sufficient confidence. However, the evaluation is known to be difficult in practice for coordinate measurements, which is the most popular technique for dimensional inspection in industry. This project developed three viable methods (i.e. A, B1 and B2) which are suitable for common industrial cases and inclusion in international standards. The methods were reported to the relevant standards body; ISO/TC 213 on Dimensional and geometrical product specifications and verification WG 10 on Coordinate Measuring Machines. The *a posteriori* type method A has been accepted as input to ISO/TC 213/WG 10's and the WG's project on ISO 15530-2 has already started. The project's other two *a priori* type methods B1 and B2 are still under scrutiny but it is hoped that they will be included in a possible future project ISO 15530-5. Thus, the project's methods will help to improve quality assurance and positively impact European manufacturing.

2 Need

In the decade prior to the start of this project, the GDP due to manufacturing grew in Europe less than the accumulated inflation (11.7 % vs. 15.7 %), with a net contraction of the European manufacturing. Key to staying competitive with low-wage developing countries is advanced manufacturing of high-quality products. However, this is impossible without high standards for intermediate and final inspections, primarily on dimensional and geometrical quantities (GPS – Geometrical Product Specification). Hence even a tiny improvement in this area should result in a very large economic impact due to the large GDP fraction of manufacturing in Europe.

Inspections provide factual evidence for decision-making. Current standards such as EN ISO 14253-1 on *GPS - Inspection by measurement of workpieces and measuring equipment - Part 1: Decision rules for verifying conformity or nonconformity with specifications*, and ISO/TR 14253-6, *Part 6: Generalised decision rules for the acceptance and rejection of instruments and workpieces*, help end users decide upon part conformity or nonconformity with specifications (tolerances) taking account of the inevitable uncertainty incurred in measurement. However, the evaluation of the uncertainty in coordinate measurement is technically very difficult and little guidance is available in international standards, which often results in industry overlooking it. This can result in the wrong decisions being made, such as (i) accepting nonconforming parts with consequences ranging from production downtime to catastrophic failures for safety-critical parts, and (ii) rejecting conforming parts causing economic loss.

The new viable and standardisable methods for evaluating the uncertainty in coordinate measurement delivered by this project will help to make inspections in manufacturing more reliable, support better quality control of products, and help maintain and strengthen the competitiveness of manufacturing in Europe.

3 Objectives

The goal of this project is to develop viable methods for evaluating the measurement uncertainty in coordinate measurements in industry, in order to support ISO/TC 213/WG 10 in further development of related standards (i.e. the ISO 15530 series). The specific objectives of the project are:

1. To develop traceable and standardised methods for evaluating the uncertainty of coordinate measurement a posteriori using type A evaluation.
2. To develop a simplified and validated method for predicting the uncertainty of coordinate measurements a priori using type B evaluation (i.e. expert judgement).
3. To demonstrate the validity of existing methods and those from objectives 1 & 2 in industrial conditions and evaluate their consistency and accuracy against the Guide to the Expression of Uncertainty in Measurement (GUM) and its supplements.
4. To contribute to revisions of the EN ISO 15530 and the EN ISO 14253-2 by providing the necessary data, methods, guidelines and recommendations, in a form that can be incorporated into the standards at the earliest opportunity. In addition, to collaborate with the technical committees CEN/TC290 and ISO/TC213/WG10 and the users of the standards they develop to ensure that the outputs of the project are aligned with their needs and recommendations for incorporation of this

information into future standards at the earliest opportunity. To promote early dissemination of the developed methods to industry.

4 Results

4.1 Objective 1: To develop traceable and standardised methods for evaluating the uncertainty of coordinate measurements a posteriori using type A evaluation

Background

A common issue in evaluating the uncertainty of coordinate measurements is that detailed and significant knowledge in coordinate metrology in general and of the specific Coordinate Measuring Machine (CMM) used is required. This knowledge is not available to most CMM users, but instead predominantly confined to specialists. While this situation may be manageable in high-ranked metrological institutions – such as NMI's or DI's and accredited laboratories – it is not manageable in industry. On the contrary, more information on the uncertainty of measurement is urgently needed in industry for making informed and sound decisions (see JCGM 106 = ISO/IEC Guide 98-4 for the role of the uncertainty of measurement in conformity assessment and EN ISO 14253-1 for dimensional measurements).

This objective intended to transfer as much knowledge as possible from *prior* to *posterior*: the latter is derived from experiments 'on the spot' and does not require (or requires a minimum of) prior knowledge i.e. information that is not usually available in industry.

This project developed a complete method for evaluating task-specific uncertainties experimentally using CMMs. Following the GUM's classification (JCGM 100 = ISO/IEC Guide 98-3) of the types of uncertainty evaluation, this method was termed *Method A* by the project partners. The method A applies to CMMs equipped with tactile probing systems and was validated specifically for them. However, in principle its overall approach should be able to be extended to other types of Coordinate Measuring Systems (CMS), for which it may be applicable e.g. application to X-ray computer tomography.

The goal for the project for method A was recognition through an international standard. Although scientific literature is extremely important for the advancement of knowledge it is not often followed in industry. In contrast international standards are widely recognised and applied and are the most effective channel for reaching industry. The standardisation body in charge of this subject matter is the ISO/TC 213 *Dimensional and Geometrical Product Specification and Verification* WG 10 *CMMs*. Three project partners (INRIM, PTB, AIST) and a project collaborator (CUT) are long-standing members of ISO/TC 213. This provided the project with direct interaction to ISO/TC 213 as well as up-to-date knowledge on current standardisation needs and requirements.

The concept of developing a *posterior* experimental method suitable for standardisation was introduced previously by Dr. Eugen Trapet. This resulted in an ISO/TC 213/WG 10's standardisation project, which however was not completed before Dr Trapet left the standardisation project. The latest document is ISO/DTS (*Draft Technical Specification*) 15530-2 (2007) which unfortunately still requires significant effort for developing and validating the method before publication. This lack of resources meant that, regretfully, ISO/TC 213/WG 10 ended up abandoning the project.

Based on the previous work in ISO/DTS 15530-2 (2007) this project went beyond the current state of the art; with AIST leading a preliminary ISO/TC 213/WG 10 project and reporting to the ISO/TC 213/WG 10 regularly about the EUCoM project's progress. At the end of the EUCoM project the ISO/TC 213/WG 10 project ISO 15530-2 moved from preliminary to regular, AIST being the project leader with partners INRIM, and PTB and the collaborator CUT as task force members.

Method A

The project's method A is based on ANOVA (Analysis of Variance). The measurement errors are excited by changing measurement conditions in repeated measurements and the statistical analysis of the obtained results is used to derive the measurement uncertainty. The uncertainty components due to errors that cannot be varied via the repetition of measurements are addressed by additional measurements on simple and widely available calibrated standards. The remaining uncertainty contributors that cannot be addressed experimentally are very few and resolved with *a prior* (type/method B, see Objective 2) knowledge that is accessible to most CMM users.

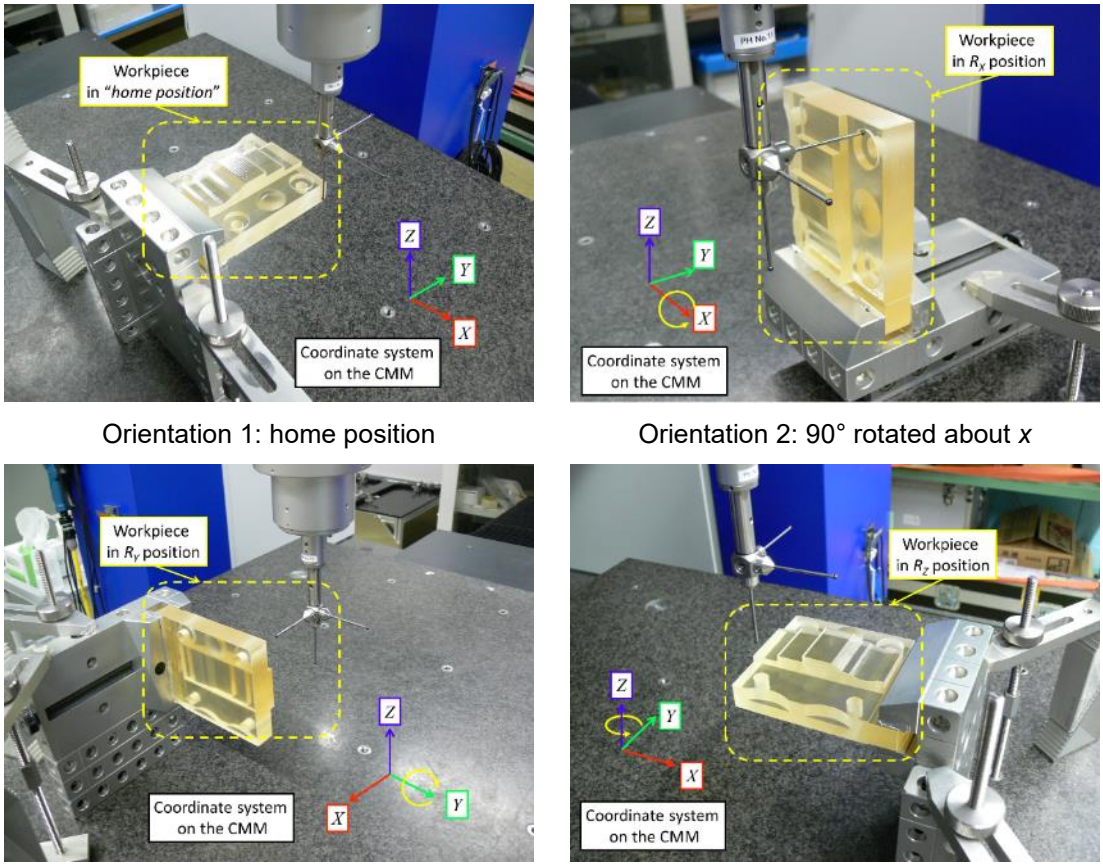

Orientation 1: home position

Orientation 2: 90° rotated about *x*

Orientation 3: 90° rotated about *y*

Orientation 4: 90° rotated about *z*

Figure 1 example of measurement setup of a workpiece in four orientations

The repeated measurements are performed on the same workpiece under measurement (Figure 1). This overcomes the important restriction of method (EN ISO 15530-3), which requires a separate calibrated workpiece identical to that under measurement is available. Which in turn significantly widens the applicability of the project's method A as CMM's are particularly valuable for their versatility and ability to measure virtually any workpiece geometry. In contrast, maintaining many calibrated workpieces (as required by EN ISO 15530-3) is an additional burden for end-users, particularly in industry.

The repeated measurements were made on the workpiece in four orientations in the same portion of the CMM measuring volume: i.e. (i) a home orientation and (ii, iii, iv) three orientations 90° rotated about a coordinate axis.

The workpiece frame of reference follows the workpiece rotations, while the CMM geometry errors remain with the CMM measuring volume. The measurements are repeated (three to five times) for each workpiece orientation. All these measurements are affected by geometry and repeatability errors, which are then separated and evaluated through ANOVA.

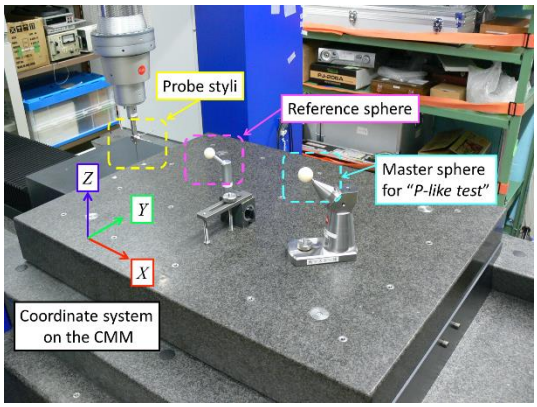

Setup for probe qualification and verification

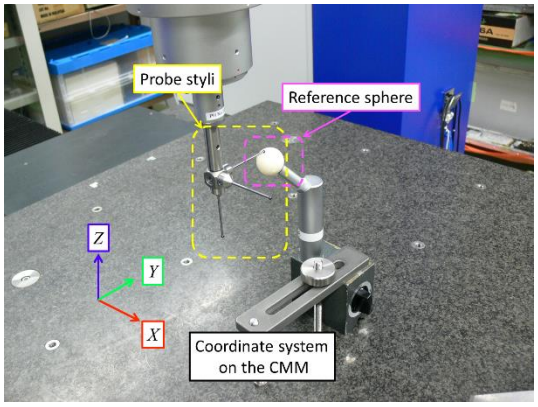

Probe qualification

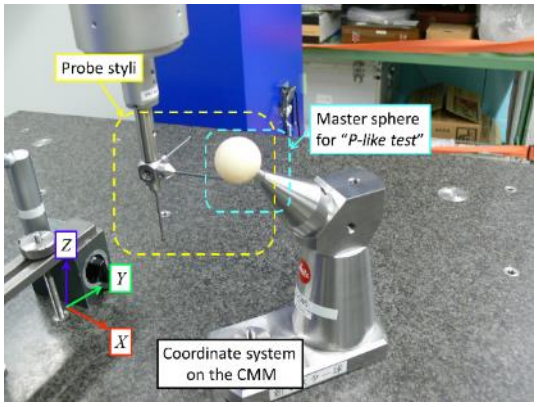

Probe verification

Figure 2 Measurement setup to assess the multi-styli uncertainty components.

Some complex measurements require the probing system to hold a structured stylus system to fit the specific workpiece geometry. Even when a single stylus suffices, the project's method A's repetitions in different orientations usually require the use of multiple styli. Therefore, to evaluate the errors introduced by a multi-stylus configuration, an additional measurement is performed.

This additional measurement is very similar to the tests in EN ISO 10360-5, which most CMM users are already familiar with, therefore should not be an issue for end users. In EN ISO 10360-5, a calibrated test sphere is measured with all styli involved and the size, form and location errors (P_{Size}, P_{Form}, $L_{\mathrm{Dia.}n\times 25}$, respectively) are evaluated (Figure 2).

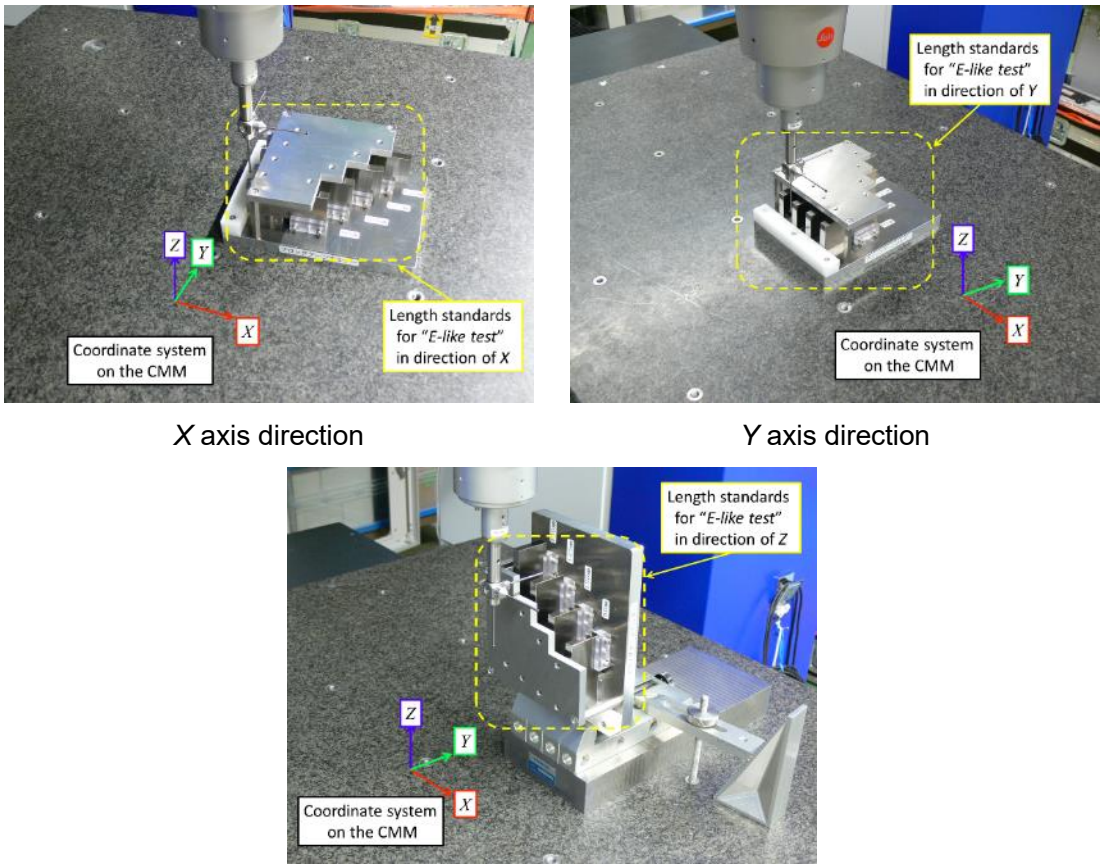

X axis direction

Y axis direction

Z axis direction

Figure 3 Measurement setup to assess the scale uncertainty component.

CMM scales can be subject to scale errors, i.e. to expansion/compression of the related coordinate values. The most likely cause of this, is the thermal expansion of the scales and the workpiece, particularly for CMM without automatic thermal compensation to the standard reference temperature (20 °C, EN ISO 1).

Notably, the scale errors are responsible for the metrological traceability of the CMM measurements. To evaluate the uncertainty component they introduce, a further measurement is performed. This is very similar to the test standardised in EN ISO 10360-2, which is very popular with most CMM users. A series of calibrated gauge blocks or other similar length standards (typically five different lengths to cover a range) are measured three times, each aligned to a different CMM axis (Figure 3). The error of indication (E_L, EN ISO 10360-2) is then evaluated.

A remaining uncertainty component not covered by the project's method A is the combined effect of the probe sampling scheme with the workpiece form errors. For instance, the diameter of an imperfect circle varies depending on where the sampled points are on the circle. When the workpiece is repeatedly measured in the four orientations, Computerised Numerical Control (CNC) - driven CMM's would replicate the same sampling strategy for all four measurements, resulting in a lack of ANOVA's sensitivity to the effect. In principle, this could be overcome by randomising the point locations across the four orientations, but this would be at the cost of significant extra programming effort. Alternatively, this effect can be accounted for separately through *a prior* (type/method B, see Objective 2) evaluation based on knowledge of the expected form errors and the numerosity of the probed points.

Another uncertainty component possibly not addressed by method A is thermal expansion. In principle, the measurements of calibrated gauge blocks or other length standards are able to capture this effect on the proviso that the temperatures when measuring the gauges and the workpiece and their materials are the same. But this may not be the case in practice, particularly in serial measurements – e.g. at the end of a production line – when the method A measurements are taken once only and the validity of uncertainty

evaluation is extended to all subsequent serial measurements. In these cases, this uncertainty component can be evaluated *a priori* (type/method B, see Objective 2) based on prior knowledge of the temperature variability and the thermal expansions of the involved materials, which is common practice in dimensional measurements.

A specific case of interest is when the measurand is a form error. For instance, this happens with roundness measurements or the verification of a profile tolerance. In such instances, the measurand is defined as the distance of two twin features encompassing the real surface or profile i.e. the distance of two concentric circles in a roundness measurement. The measurand is then always positive *by definition* or null for a perfect geometry. This prevents effective use of ANOVA. Using the project's method A, ANOVA is then applied to each probed point individually, whose local form deviations are signed. Thus this requires a further level in the ANOVA: *point*, in addition to *repetition* and *orientation*.

A possible impediment to the application of the point-wise approach in form measurements is that some CMM software interfaces do not disclose the details of the local form deviations, but only display the overall form error. This would prevent application of the method A point-wise. In this case, the maximum entropy principle is applied: the form deviation is assumed to be symmetrical about the zero (for instance ±0.05 mm in the case of an indicated 0.1 mm form error) and ANOVA is applied individually to the two extreme values.

An extension to the case of scanning mode probing is also possible. The stylus tip slides softly on the workpiece surface instead of hitting it at discrete points; however, the scanning results in a finite, possibly large, number of points, which ultimately is the same case of discrete mode probing.

Method A was mostly developed by AIST with the support of INRIM. Partners PTB, NPL, CMI, GUM, UNIPD, and ATH contributed with comments and refinements to method A.

Summary

In summary the project achieved objective 1; To develop traceable and standardised methods for evaluating the uncertainty of coordinate measurement a posteriori using type A evaluation.

The project achieved this by developing an experimental method for evaluating uncertainty *a posteriori*, based on ANOVA. The project's method A removes the limitation of EN ISO 15530-3 i.e. that a working standard almost identical to the workpiece under inspection is needed and independently calibrated, as in this new method A the workpiece alone suffices. The only additional standards required are a calibrated sphere and few calibrated gauge blocks, which are cheap and easily available.

The method A also requires some additional experimental effort: the measurement is repeated with four different workpiece orientations, and the calibrated sphere and gauge blocks are measured. However, this extra effort is needed only once when the measurement is repeated for several identical workpieces, i.e. for serial inspections.

The evaluation is entirely experimental and hence the complicated issue of the CMM geometry errors is resolved by ANOVA of the measurement data. The complex effect of the probing system is also resolved by method A by the measurement of the calibrated sphere (in line with EN ISO 10360-5). In addition, the traceability to the SI unit, the metre, is resolved by measurement of the calibrated gauge blocks. Very little prior information is needed for method A.

The method A covers both size characteristics and geometrical characteristics, either with reference to a datum or without. It also covers the case of geometrical characteristics when the access to raw data is limited, which is resolved by suitable approximations based on the maximum entropy principle. This was further extended to freeform measurements, either in discrete-point probing or scanning modes; the latter is dealt with as long and dense series of discrete points.

Spreadsheets were prepared to implement the calculations and are available to end users via Zenodo (https://doi.org/10.5281/zenodo.6563175) and the project website (www.eucom-empir.eu), to make method A easier to implement in practice.

There is only one main limitation of method A, which is the requirement to reorientate the workpiece with 90° rotations for each coordinate axis. This means that method A may not be feasible for large workpieces, due to their weight, or potential difficulties in fixturing or limitations of the CMM measuring volume (for high aspect ratios workpieces and CMMs).

Further to the project's original aim, a slight adaptation of method A was tested with computer tomography and yielded encouraging results, that could in future give even wider breadth to the project's method for evaluating uncertainty *a posteriori*.

4.2 Objective 2: To develop a simplified and validated method for predicting the uncertainty of coordinate measurements a priori using type B evaluation (i.e. expert judgement)

Background

The main objective of *a priori* methods (termed *Methods B* in the project) is to *predict* the uncertainty before any measurements are *taken*. This is useful for (i) checking whether a perspective measurement strategy is adequate for a predefined target uncertainty and (ii) comparing alternative CMMs and strategies. Thus, a priori methods are important for the design of experiments and for developing measurement methodologies that are fit for purpose.

Another objective of *a priori* methods is to estimate the uncertainties associated with actual measurements based on information that is available prior to the measurements without the need for (i) additional statistical analysis of the actual measurement results, which may require resources that are not available, or (ii) additional experiments that are required by *a posteriori* methods (method A, Objective 1).

Prior information

The *a priori* nature of methods B necessitates that the evaluation cannot rely on experimental information derived from task-specific measurements. Instead, it can only rely on general information about the CMM and the environment. The main source of such information is the metrological characteristics of CMMs as defined in the EN ISO 10360 series of standards, which are widely accepted and used in industry. The EN ISO 10360 series provides a set of predefined indicators – the metrological characteristic – to measure the CMM performance. Paradigmatic measurement tasks are defined and their results summarised by a set of metrological characteristics deemed as representative of the actual CMM performance. Relevant for the project's methods B are those defined in EN ISO 10360-2 and EN ISO 10360-5, namely:

- E_L, *length measurement error* (EN ISO 10360-2). Captures the CMM capability of measuring distances accurately regardless of their orientation in the measurement volume. It is a powerful indicator of how well-behaved the measurement volume is. This error is a good measure of how the actual volume deviates from the nominal, that is, how curved, oblique and expanded/compressed it is.
- P_{Size}, *size error* (EN ISO 10360-5). Captures the CMM capability of measuring the distance of the probing system to the workpiece surface. A positive error indicates that the surface is sensed as shifted out of the material and vice versa.
- P_{Form}, *form error* (EN ISO 10360-5). Captures the CMM capability of a probing system of sensing the workpiece surface accurately, independently of its orientation, or equivalently, independently of the probing direction. Any anisotropy of the probing system results in a measured form error of a nearly perfectly-shaped test sphere.
- $L_{Dia.5\times25}$, *multi-stylus location error* (EN ISO 10360-5). Captures the CMM capability of relating the measurements taken with different probe styli to each other.

The above metrological characteristics are subject to Maximum Permissible Errors (MPEs), typically set by the CMM manufacturer and reported in data sheets.

When applying methods B, the actual measured values of the above metrological characteristics may or may not be available. A necessary condition for the former case (where the metrological characteristics are available) is that the CMM is identified at the time of the uncertainty prediction: this is because different CMMs – even of the same model – may perform differently. When several CMMs are available (such as in a large laboratory or workshop) or when CMM models are being compared to each other in anticipation of a specific measurement task, these values are not available, but their MPEs are. MPEs may be derived from data sheets, or from purchase contracts, or from company regulations.

When both the measured value and the MPE are available of a metrological characteristic, it is recommended that the former is fed to the methods B for the uncertainty evaluation. Indeed, the measured

values are more tailored to specific CMMs than the MPEs are, as MPEs apply to all CMMs of the same model.

Needed approximations

The standard approach for evaluating the uncertainty according to the GUM starts with the measurement model that links the input quantities to the measurand value. The input uncertainties are next evaluated and propagated to the measured value via sensitivity analysis through the measurement model. In coordinate measurements, this is very difficult due to:

- The input quantities are several hundreds, and usually highly correlated to each other. The large majority of them capture the complexity of the CMM geometry errors, which possess a virtually infinite – and practically very large – number of degrees of freedom.
- The overall measurement is based on elementary geometric features such as planes, cylinders and cones. There is no close-form equation for fitting such features to probed points, only iterative numeric approximations. This prevents from modelling the measurement analytically.

The project's goal was to develop a method B that needed very limited prior information and could use comparatively simple software programmes i.e. without inverse-problem best-fitting. To achieve this, approximations were necessary. The challenge for the project was to find an appropriately simplified method B that didn't not impact the uncertainty evaluation too much. Fortunately, the project's methods B were aimed at predicting the uncertainty and not at correcting errors, and therefore probabilistic knowledge is sufficient.

The development of a single method B was originally planned in the project, but a second method was also developed as an additional project output. The resulting two methods were termed methods B1 and B2. The methods B1 and B2 differ in how their approximations are taken and are described below.

Method B1

This method was mostly developed by the NPL, with assistance from INRIM.

Coordinate measurements are conceptually divided into two steps: (i) the probe sampling and (ii) the evaluation of the geometrical characteristics of interest. In the first step, the real geometry is converted to a point cloud whose coordinates are measured. In the second step, the point cloud is evaluated in software to derive the values of interest, for example the coaxiality of two cylinders. The separation between the two steps is more conceptual than practical, as some characteristics may be evaluated before all points are probed and the two steps may overlap in time.

Following the coordinate measurements, the uncertainty is then evaluated according to project's method B1 using the same conceptual steps. In a first step, the uncertainty of the point cloud is evaluated and in a second step it is propagated to the characteristics of interest.

The joint uncertainty of a cloud of m points is expressed by a ($3m \times 3m$) variance matrix, a row and a column for each coordinate. The matrix also captures the correlation between point coordinates.

The propagation to the sought characteristics is done by sensitivity analysis. This may not be obvious/accessible to all CMM users but can more easily done by experts. A finite set of typical geometries are met in practice, and the results of the sensitivity analysis can be recorded in look-up tables and/or software programmes.

The real challenge is the evaluation of the point cloud uncertainty. This is where the approximation occurs and where the method B1 goes beyond the state of the art. The geometry error model is simplified to its most dominant effects, i.e. scale errors and squarenesses. These are first order effects, which have been shown to be dominant, based on previous expert experience.

The correlation among the geometry errors is modelled according to their mutual distance. This stems from the observation that points close in space are more likely to be affected by similar geometry errors, whereas well separated points are more likely to be affected by independent errors. A key parameter of this spatial correlation is the length-scale parameter λ_E that exponentially separates "close" from "separated" points.

Figure 4 shows its effect on an error function: the shorter λ_E the less correlated the errors with an increase in random oscillation, in contrast, smooth nearly-linear functions are seen for long λ_E.

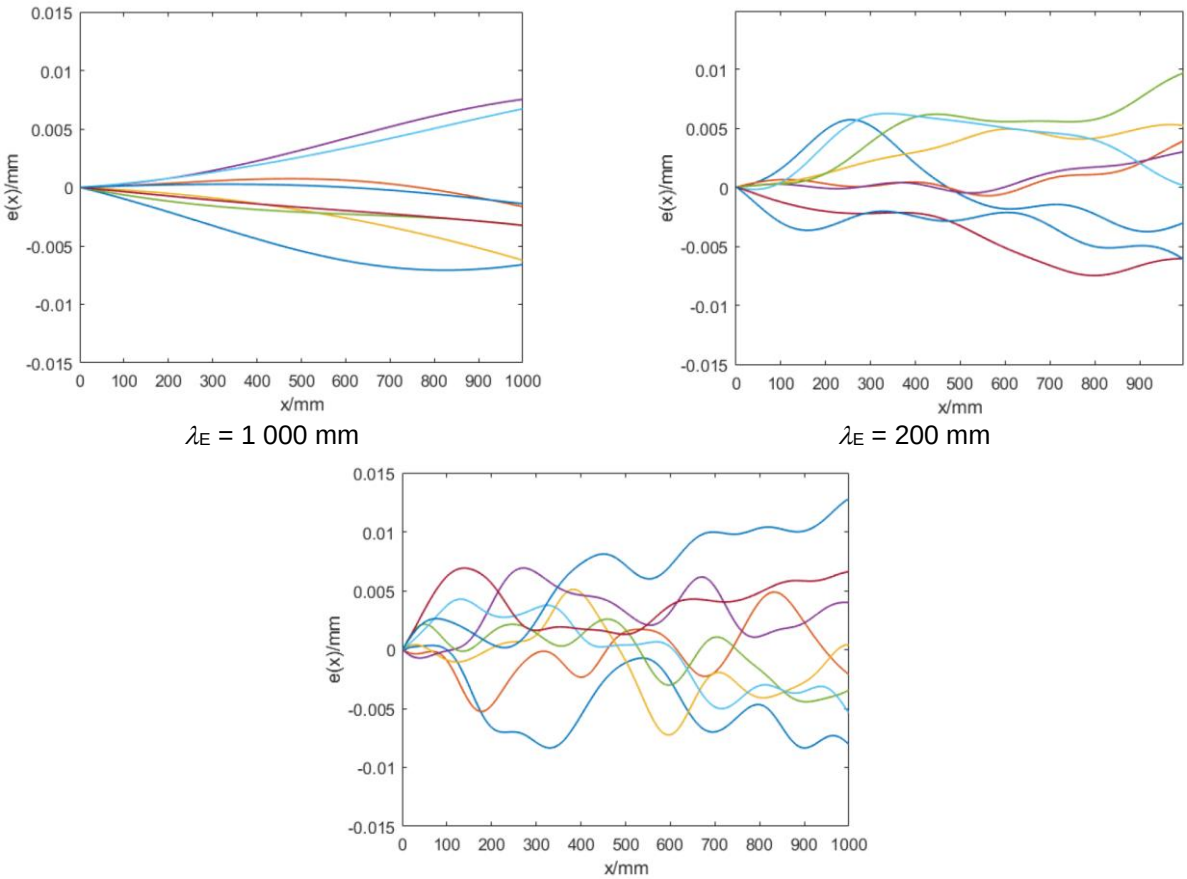

λ_E = 1 000 mm

λ_E = 200 mm

λ_E = 100 mm

Figure 4 Examples of spatially-correlated error functions generated with decreasing values of the length-scale parameter λ_E.

The evaluation is complemented with further uncertainty components accounting for the probing errors and the CMM repeatability.

The assignment of the input uncertainty to the few parameters involved in the resulting approximate model used of evaluating the uncertainty is done by comparing their effects on the test experiments in EN ISO 10360-2 and EN ISO 10360-5.

The goal was therefore to identify plausible model parameters compatible with EN ISO 10360 test values (**Error! Reference source not found.**).

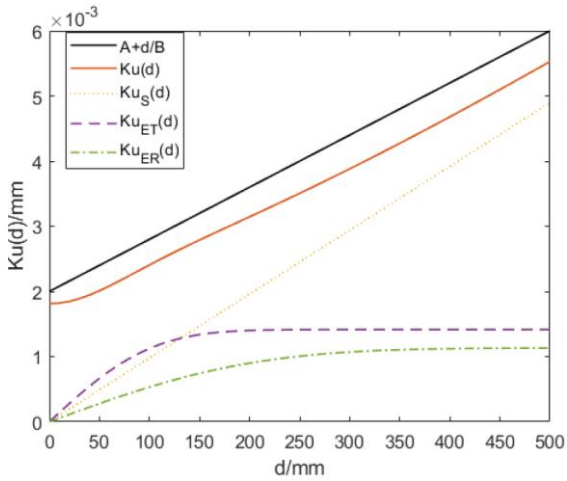

Figure 5 Plausible behaviour of a CMM. The MPE (black) is compared with the modelled uncertainty components (yellow, violet and green) resulting in the combined uncertainty (light brown).

The overall method B1 can be summarised with the following steps.

1. The input uncertainties are assigned to the few error parameters involved in the method with the objective of making a CMM plausibly consistent with the given MPEs (EN ISO 10360-2 and EN ISO 10360-5).
2. The points probed in the measurements, their locally orthogonal directions to the surface and the probe offsets of the stylus tips used for probing are fed to the software that derives the point cloud uncertainty. The nominal points are sufficient (with no need for actual measurement values), that is, the evaluation is possible before any measurements are taken.
3. The point cloud uncertainty is propagated to the output quantities of interest through sensitivity analysis. This is done by looking up predefined tables or with simple software such as a spreadsheet.

A number of typical method B1 cases were developed by the project, implemented in software and made available to the public via Zenodo (https://doi.org/10.5281/zenodo.6563175).

Method B2

This method was mostly developed by ATH, with contributions from INRIM.

One of the complexities of evaluating the uncertainty of coordinate measurements is that many points are measured on the workpiece surfaces (point cloud) and then the elementary features are computed by best fitting. This is done numerically with no close-form equations, which makes propagating the uncertainty difficult. The project's method B2's solves this complexity by reducing the points in the cloud to an essential set, for which close-form equations to the sought features can be derived.

The points in the essential set are as many as the intrinsic degrees of freedom of the specific geometry under measurement. Using a flatness measurement as an example: by definition, the measurand is the minimum distance of two parallel planes that fully encompass the nominally-flat real surface. A plane in space possesses three degrees of freedom, i.e. it can be expressed by three independent parameters: two for its orientation (two angles such as azimuth and elevation) and one for its location (such as the distance to the origin). A pair of parallel planes possess one degree of freedom more i.e. the separation of the planes, which results in four degrees of freedom overall. Therefore, the essential set is made of four points. Their allocation to the two planes is either three on a plane and one on the other, or two on each plane. The former is the case of concave or convex surfaces, while the latter of twisted surfaces. Figure 6 illustrates the two cases and shows the resulting close-form equations.

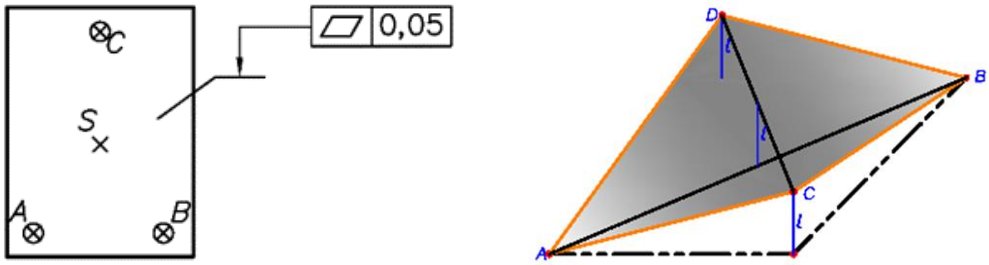

Concave o convex surface

Twisted surface

$$l(\mathrm{AS},\mathrm{AB},\mathrm{AC}) = \frac{|\mathbf{AS}^{\mathrm{T}}(\mathbf{AB}\times\mathbf{AC})|}{\|\mathbf{AB}\times\mathbf{AC}\|} \qquad l(\mathrm{AC},\mathrm{BA},\mathrm{DC}) = \frac{|\mathbf{AC}^{\mathrm{T}}(\mathbf{BA}\times\mathbf{DC})|}{\|\mathbf{BA}\times\mathbf{DC}\|}$$

Figure 6 Essential sets of points for measuring flatness and the resulting close-form equation.

The input quantities of the resulting equations are displacement vectors between pairs of essential points; ultimately, they are distances. This enables a straightforward evaluation of the input uncertainties. Indeed, the $E_{\mathrm{L,MPE}}$ value (the MPE set on the length measurement error, EN ISO 10360-2) bounds distance errors and is perfectly suited for the purpose. Furthermore, the equations are analytically simple and the sensitivity analysis for propagating the input uncertainties is straightforward.

Any geometry can be dealt with this approach, even complex ones. Figure 7 shows the complex example of a steering knuckle. Detailed analysis of this complex geometry goes beyond the scope of this document; but even in this case the resulting equation is close-form and comparatively simple.

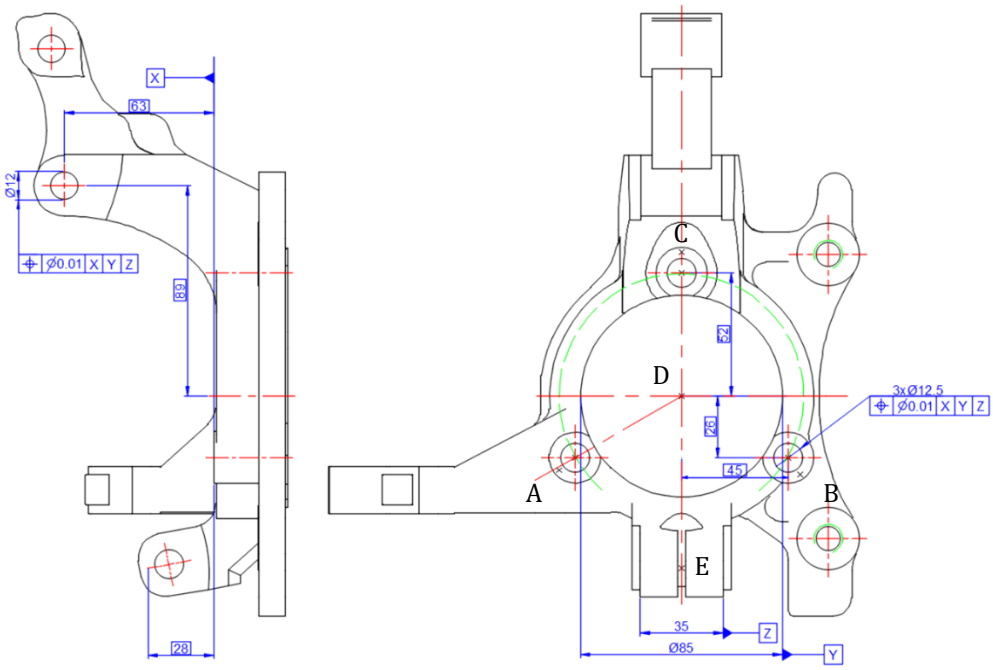

$$\boldsymbol{S} = \begin{pmatrix} \mathbf{ES}\cdot\dfrac{(\mathbf{AB}\times\mathbf{AC})\times\mathbf{DE}}{\|(\mathbf{AB}\times\mathbf{AC})\times\mathbf{DE}\|} \\ \mathbf{DS}\cdot\dfrac{[(\mathbf{AB}\times\mathbf{AC})\times\mathbf{DE}]\times(\mathbf{AB}\times\mathbf{AC})}{\|[(\mathbf{AB}\times\mathbf{AC})\times\mathbf{DE}]\times(\mathbf{AB}\times\mathbf{AC})\|} \end{pmatrix}$$

Figure 7 Essential set of points for measuring the position errors of three bores of a steering knuckle (indicated with A, B, C) and the resulting close-form equation.

A detailed analysis of possible archetypal geometries showed that they are not many and that very different geometries may share the same equation, e.g. that for flatness of a concave/convex surface holds for the position of a point relative to a datum plane as well. The identified geometries were 34 sharing a total of 13

close-form equations. These equations and the sensitivity coefficients derived from them are easily recorded in look-up tables and could be ideally published in an international standard.

The essential points are not necessarily extracted from the point cloud. They are representative of the geometry under measurement and detached from the sampling strategy. This enables the evaluation of the uncertainty even before the sampling strategy is defined. However, method B2 is insensitive to detailed sampling strategy and therefore cannot account for it.

The close-form equations are sensitive to where the essential points are located. With no information on the actual probing strategy, this is an a priori choice that must be made by expert judgement. The choice should be made according to the maximum entropy – or minimum surprise – principle, i.e. points are located where expert judgment indicates them as most suited *given the geometry under measurement*. This constraint is extremely important for method B2, as the selection of geometry-specific essential sets of points effectively links the otherwise generic sensitivity equations to the actual geometry under measurement. For example, if a circular planar surface of a workpiece is fully available for probing, the least-surprise criterion suggests three essential points 120° apart close to the external border. If holes or other impediments to probing are present in the surface, then the three essential points should be taken based on expert judgement.

A number of typical cases were developed for method B2, implemented in software and have been made available to the public via Zenodo (https://doi.org/10.5281/zenodo.6563175).

Summary

In summary the project achieved objective 2; To develop a simplified and validated method for predicting the uncertainty of coordinate measurements a priori using type B evaluation (i.e. expert judgement).

The project achieved this by developing two methods for evaluating the uncertainty a priori; method B1 and B2. Method B2 was developed in addition to the original project's plan and provided added value to the project. Methods B1 and B2 are based on prior information available at no or little extra cost. When available, detailed testing results for a specific CMM can be used to apply the project's methods B1 and B2; when not, similar information is derived from the MPEs.

The purpose of methods B1 and B2 was primarily to *predict* the uncertainty before any measurement is taken, and thus they are necessarily coarser than the method A, which instead is fed with actual measurement results. Approximations were taken, to keep the project's methods practically viable and the two methods differ primarily in their type of approximation.

The method B1 is based on two steps: (i) the first step considers the cloud of probed points and evaluates the joint uncertainty of their coordinates; (ii) the second step derives the uncertainty of the final measurement from that of the cloud. The main limitation of the method B1 is that it requires mathematically complex software, whose development is generally not available to average CMM users (but is within the capabilities of CMM manufacturers). Therefore, the method relies on the availability of a software suite for implementing it, which the project has helped to provide.

The method B2 is based on an approximation upon the probed points. Essential sets of points are considered in method B2, which enables a dramatic simplification of the subsequent calculations. For example, the flatness of a nominally flat surface is defined as the shortest separation between two parallel planes that encompass the surface and possesses four degrees of freedom. Therefore, four points are taken as representative for flatness, three on a plane and one on the surface point farthest off-plane. The locations of such points cannot be predicted and are then approximated by method B2 to the most logical locations for the workpiece under measurement.

Once the points are selected, the measurand is derived with a simple closed-form function (which is possible as the number of points matches the unknowns). The input quantities are point-to-point distances and their input uncertainties are evaluated based on values known via EN ISO 10360-2. The propagation to the final uncertainty is made through sensitivity analysis.

A comprehensive study by the project, identified the essential point sets that should be able to cover a large majority of practical cases, including complex geometrical tolerances. These cases and their sensitivity coefficient equations were suitable to be summarised in tables, and hence input to international standards. The main limitation of method B2 is that it does not account for detailed sampling strategies and cannot compare competing ones. However, method B2 is able to capture the macro-geometry constraints by proper localisation of the essential points.

4.3 Objective 3: To demonstrate the validity of existing methods and those from objective 1 & 2 in industrial conditions and evaluate their consistency and accuracy against the Guide to the Expression of Uncertainty in Measurement (GUM) and its supplements

Background

The method A (Objective 1) is based on reversals and ANOVA, whose theoretical foundations are very sound. However, there is no detailed mathematical model available of the specific reversal exploited in the method, and the proper accounting of all uncertainty contributors is more understood by experts than proven. The methods B (Objective 2) are based on sound GUM-compliant theories but resort to major approximations to keep the general problem manageable in practice. Therefore, the methods required proper experimental validation before they could be accepted for use.

An extensive measurement validation campaign was carried out by partners INRIM, NPL, TUBITAK, CMI, DTI, Metrosert, GUM, TEKNIKER, UNIPD, ATH, TEKNIKER and AIST and collaborators CUT and MG in the period February 2020 to October 2021, under the lead of the PTB.

Unluckily, the timing was particularly unfortunate due to the COVID-19 lockdowns, which disrupted the original plans for the validation campaign. But in spite of this, 47 complete sets of measurements from 12 different CMMs were successfully gathered and evaluated by the project.

Artefacts

The artefacts used for the validation campaign were selected by finding the right balance between thoroughness of the validation and practical feasibility. The criteria to achieve the former (thoroughness of the validation) were: prismatic and freeform geometries, geometry and surface quality (from reference standards to industrial grade workpieces), diversity of implemented features (e.g. length, angle, parallelism, roundness) with and without reference to a datum system, availability of reference measurement values. The criteria to achieve the latter (practical feasibility) were: availability to the partners and collaborators suitability for shipping (e.g. weight, ease of handling), and size (100 mm to 500 mm).

Six artefacts were circulated, three with prismatic geometries and three freeform geometries (see Figure 8). They were: (1) a connecting rod, (2 & 3) two multi-feature checks (one high-quality and one medium quality), (4 & 5) two involute standards (one plain and one with three sinewaves superimposed) and (6) a hyperbolic paraboloid.

- The connecting rod was a real workpiece manufactured in the automobile industry.
- The two multi-feature checks were standards designed to exhibit a variety of dimensional and geometrical features. The two of different quality explored the effects of geometrical quality.
- The two involute standards had a simple and well-defined mathematical description but in fact they were measured with no regard to it, rather as fully freeform workpieces. The three sinewaves superimposed to the involute profile of one of the standards enabled investigation of the effects of harmonics. The measurements were evaluated either with or without reference to the datums in order to simulate inspection of profile tolerances in either case.
- The main feature of the hyperbolic paraboloid (hyperbolic and parabolic profiles of orthogonal cross sections) was not exploited to drive the measurements and the hyperbolic paraboloid was instead measured as a pure freeform surface profile at 52 predefined points in a grid on the surface.

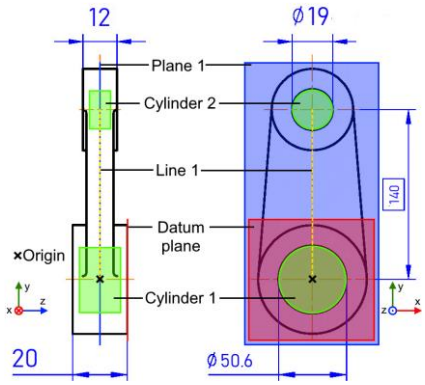

Connecting rod (prismatic)

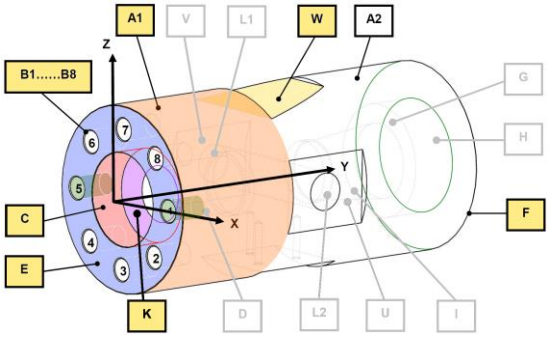

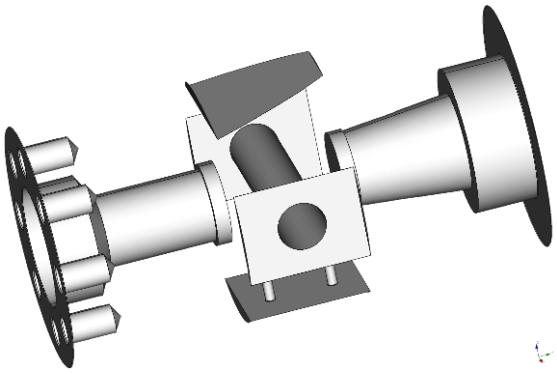

Multi-feature checks: one high-quality and one medium-quality (prismatic)

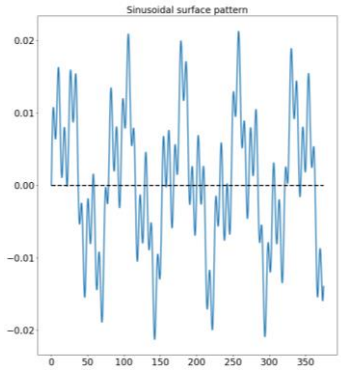

Involute standards: plain profile and with three sinewaves superimposed (freeform)

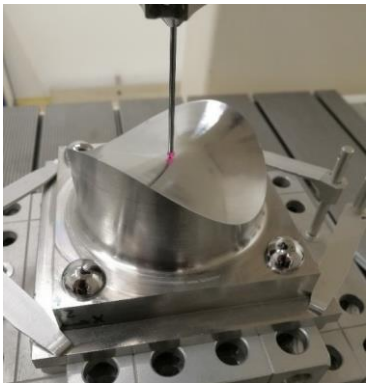

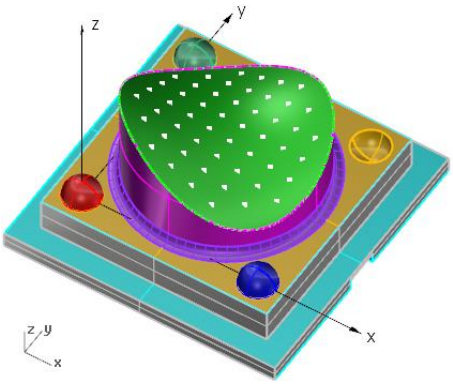

Hyperbolic paraboloid (freeform)

Figure 8 Artefacts used in the validation campaign.

Each artefact was specifically measured by a designated partner to provide reference values to compare with. These reference measurements were not necessarily done following the EUCoM procedure, rather at the partner's best capability according to its best practice. The connecting rod was measured by partners ATH, CMI, Metrosert, PTB, TEKNIKER, TUBITAK, UNIPD and collaborator MG, the two multi-feature checks were measured by partners AIST, METROSERT, PTB, CMI, DTI, GUM, UNIPD, the two involute standards were measured by partners ATH, CMI, INRIM, NPL, PTB, UNIPD and collaborator MG, and the hyperbolic paraboloid was measured by partners CMI, DTI, GUM, PTB, TEKNIKER, UNIPD and collaborator CUT. Two more artefacts were originally planned for use in the validation campaign, but disruption due to the COVID-19 pandemic prevented their use. The other 2 artefacts would have been a steering knuckle (manufactured workpiece, prismatic) and a freeform standard designed and manufactured by NPL.

Data acquisition and collection

To make the measurement process easier and more consistent, shared part programmes to measure the artefacts were developed in two major CMM programming languages. However, local software adaptations were necessary, and more than these two languages were eventually used overall: as a result, the measurements followed the same agreed protocol – in particular the detailed definitions of the measurands – but were not done with the same part programmes.

The data of interest for the three methods from Objectives 1 & 2 under validation were different:

- Method A (Objective 1): the measurement results of all measurands in the four artefact orientations, the measurements of the gauge blocks (to detect the scale errors) and of the test sphere (to detect the probing errors). For freeform artefacts and for the form errors in prismatic geometry, the measurement of the individual probed points.
- Methods B (B1 and B2; Objective 2): the MPEs of the used CMMs. Specifically for the method B1, the nominal sampling points, the directions locally normal to the surface, and the probe offset of the stylus tip used for each point.

The data was collected in spreadsheets to facilitate its collection and subsequent evaluation. For method A (Objective 1), the same spreadsheet was also used to perform the uncertainty evaluation.

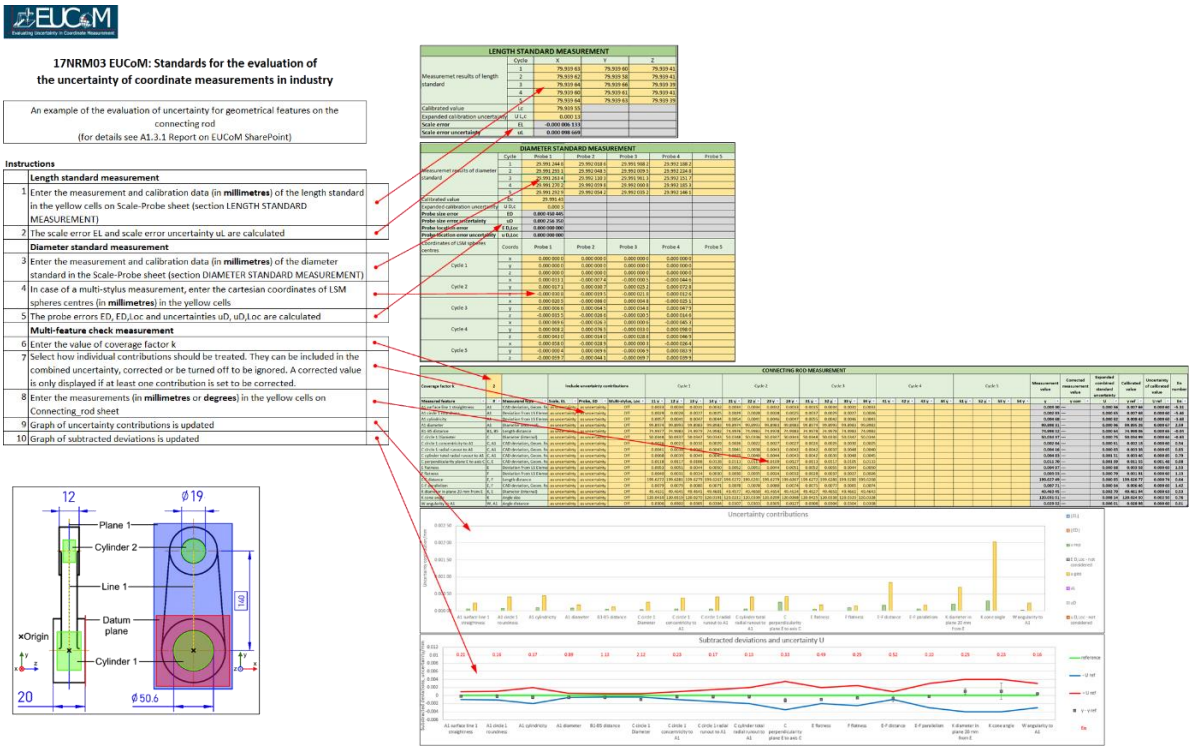

Figure 9 Example of the used spreadsheets. Directions of use were included.

Validation criteria

Measurement comparisons among laboratories are common practice in accreditation and within the CIPM-MRA. In such cases, the goal is to support laboratories' Calibration and Measurement Capabilities (CMCs) claims, i.e. to validate them experimentally. This is based on the normalised error E_N, the ratio of the error to its expanded uncertainty (EN ISO/IEC 17043). The claim is deemed as supported when $|E_N| \leq 1$. The error is taken as the deviation from the reference value, and its uncertainty as the combination of the claimed expanded uncertainty and that of the reference value:

$$E_{\mathrm{N}} = \frac{x - x_{\mathrm{REF}}}{\sqrt{U^2 + U_{\mathrm{REF}}^2}}$$

In this project's validation campaign, the method for evaluating the uncertainty was under scrutiny, instead of laboratory CMCs. Different accuracy CMMs were deliberately used to get better validation coverage, even if a project partner could have achieved better results with other measuring equipment or other measurement strategies. The E_N was still used as a score for the validation, but the importance of numerator and denominator in its defining equation was reverted: i.e. in CMC validation, the numerator must be small enough compared with the denominator; in this validation campaign, the denominator had to be large enough compared with the numerator.

For the Method B2 (Objective 2), another statistical tool was used to compare the uncertainties estimated by method B2 and method A (Objective 1), the chi-squared test. The chi-squared variable was evaluated as

$$\chi^2 = \frac{n u_{\mathrm{A}}^2}{u_{\mathrm{B2}}^2}$$

where u_{A} and u_{A} are the standard uncertainties evaluated with the Method A and B2 (Objective 1 & 2), respectively, and n is the sample size in method A. The method A and B2 uncertainty evaluations were deemed as equivalent if the value of χ^2 laid between two critical values – the 2.5 % and 97.5 % quantiles, respectively – for a chi-squared distribution with $(n-1)$ degrees of freedom.

Results

Figure 10 shows an example of the charts produced to evaluate the validation campaign results.

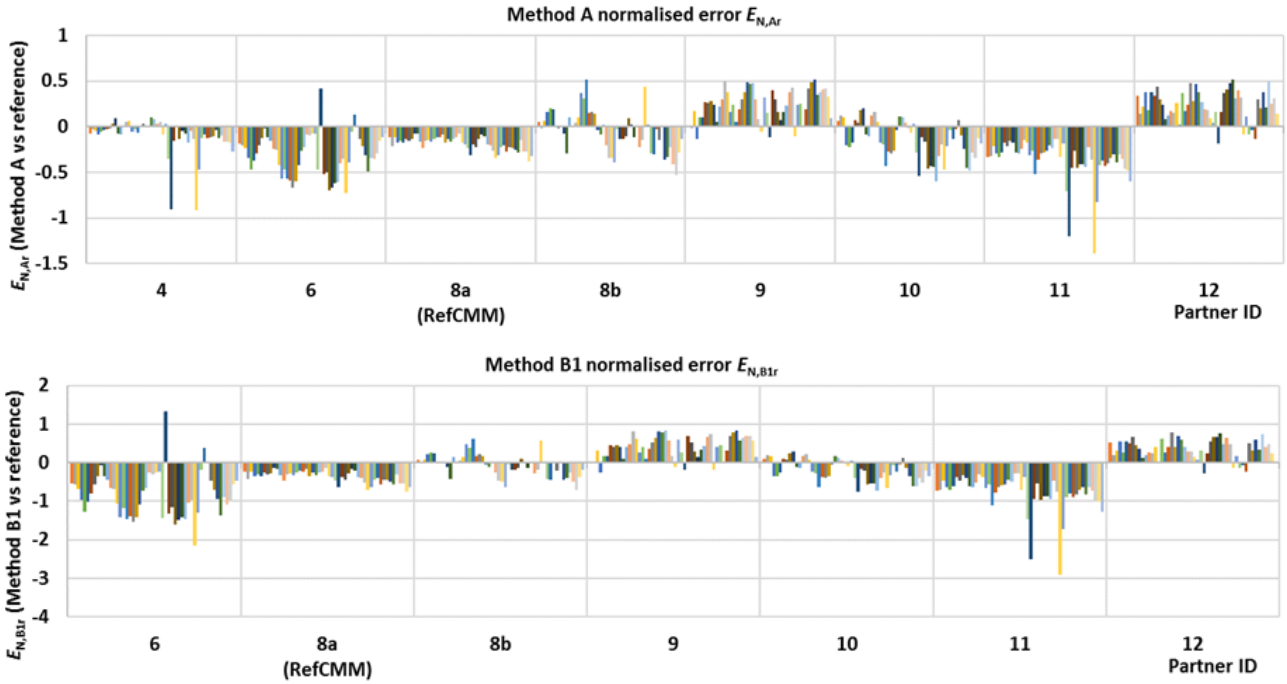

Figure 10 E_N values obtained for the hyperbolic paraboloid, with method A (top) and B1 (bottom). Each small column represents one of the 52 measured points on the surface.

In the validation campaign an unfortunate situation occurred for the connecting rod artefact. The results of the validation were unsatisfactory as a significant number of large $|E_N|$ values were found, indicating uncertainty underestimation. In contrast, the uncertainty for some other measurands of the same workpiece were perfectly adequate. This artefact was relevant because the connecting rod was the one industrial workpiece used in the validation campaign (the steering knuckle had to be abandoned due to COVID-19 limitations).

To try and understand the issue with the connecting rod artefact, the measurement data for it was analysed thoroughly. From this, two reasons were identified for the problem:

1. The connecting rod was not monolithic, its big eye being the assembly of two parts. A drift was detected by repeating the measurement at the end of the circulation at the same laboratory that provided the reference values beforehand. This affected the measurements related to the big eye. Further to this, its upper planar surface had been taken as the primary datum for other measurands, which were also affected. Supporting this reasoning, the evaluated uncertainties for the measurements not related to the big eye's drift, such as the small eye diameter and the separation of the two eyes, were very satisfactory.
2. When defining the measurands and the measurement procedure, there was a lack of awareness of a designed deviation from cylindricity with the two eyes, which were supposed to be nominally cylindrical. This resulted in cross talk with a slight inclination due to the primary datum drift.

The conclusions from the analysis of the connecting rod artefact were that although the connecting rod artefact measurements were unable to support the methods A, B1 & B2, the connecting rod artefact measurements could not disprove the methods either.

Experiments were also performed to investigate the effect of the scanning speed in measurements done in scanning mode. A dependence on the speed was detected, with results asymptotically approaching those in discrete probing mode when the speed approaches zero. The formulation of the methods A, B1 and B2, did not include this effect due to scanning speed, which had been overlooked when originally developing the methods. However, as the investigation of the effect of the scanning speed in measurements done in scanning mode, was not originally planned as part of the validation campaign, its results were not sufficient to provide input to upgrade the methods A, B1 and B2.

The overall conclusions of the validation campaign were:

- Apart from the case of the connecting rod artefact, the method A (Objective 1) was proven to evaluate uncertainty satisfactorily. Some cases of underestimation were found, but these cases were within the expected statistical bounds, or very close to.
- Methods B (B1 and B2; Objective 2) were able to predict the uncertainty, even if with a slightly higher incidence of underestimations than the expected 5 % (for a coverage probability of 95 %). Some significant overestimations were also found. This is most likely due to the much poorer prior information available to the methods B than the experimental data to the method A, and to the approximations underpinning methods B. The main objective of methods B is the prediction of the uncertainty, typically to compare instruments and procedures before the actual measurements. In this sense, a coarser (more variable) uncertainty evaluation is still deemed as useful and valuable.
- The multi-feature checks exhibited a wide variety of features: dimensional and geometrical, with and without reference to a datum system. The overall success, particularly of the method A (Objective 1), in evaluating the uncertainty indicates that the validity of the methods is sufficient for wide/general application.
- The methods A, B1 and B2 proved to be effective in scanning mode too, provided that the scanning speed is moderate. This may not be satisfactory in industry, where saving time and hence a faster scanning speed is key. However, further, future work to improve the methods and account for the scanning speed could be done, particularly for the method A.

Summary

In summary the project achieved objective 3; To demonstrate the validity of existing methods and those from objectives 1 & 2 in industrial conditions and evaluate their consistency and accuracy against the GUM and its supplements.

The project achieved this by validating the methods from Objectives 1 & 2 with different CMMs in order to provide robust evidence and ascertain the validity limits of the methods. The validation campaign involved two sets of artefacts: (i) prismatic geometries and (ii) freeforms. A total of 6 workpieces were measured, representative of real measurements in industry: (1) a connecting rod and (2 & 3) two multi-feature checks (high and low quality), which were the prismatic geometry set of standards; and (4) a hyperbolic paraboloid and (5 & 6) two involute gear standards (with and without a sinusoidal wave superimposed onto the involute profile), which were the freeform set of standards.

For each artefact, their measurands were documented in detail. As most partners used two CMM programme languages with their CMMs, part programmes in these two languages were developed and circulated amongst the partners to make the validation exercise more consistent. The data types required by the methods developed in Objectives 1 & 2 were documented to ensure that the measurements taken during the validation exercise provided the required data.

A detailed measurement plan was prepared, but the COVID-19 pandemic resulted in repeated revision and delays to the plan. However, twenty-two measurements of prismatic artefacts and twenty-four measurements of freeforms were successfully carried out.

The prismatic geometry artefacts were calibrated, and the freeform artefacts were given reference values prior to the circulation. These reference values were compared with individual measured values. The normalised error E_n was then evaluated based on the uncertainties of the reference values and those derived from the project's methods. Values $|E_n| \leq 1$ indicated that the uncertainty estimation was reliable, $|E_n| > 1$ that the uncertainty was underestimated, and the methods should be revised, $|E_n| << 1$ that the uncertainty was likely overestimated and the methods could be relaxed. This approach was in line with EN ISO 15530-4. For method B2, a chi-squared test was also carried out to validate the null hypothesis that the predicted uncertainty was the same as the experimental one.

Overall, the results of the validation campaign were very promising and good.

More specifically, the type A method proved to be very effective for all but the connecting rod workpiece, for which a relevant number of underestimations occurred. But detailed analysis showed that the choice of the connecting rod artefact had been unfortunate, as its big eye was not monolithic, and its two halves drifted

during measurement. To try and address this, the denominator in the normalised error E_n (the uncertainty) was scrutinised, but discrepancies occurred in the nominator instead. The big eye was also the primary datum feature, and its drift affected most of the measurands even when not related to the big eye. Furthermore, the eyes were assumed cylindrical ignoring that they were far from that *by design*; this introduced additional cross-talk with the datum system shift and with differences in probing strategies. In contrast method A performed well for other measurands on the same connecting rod workpiece (those not affected by the primary datum) and for all freeform artefacts and for the medium-quality multi-feature check (LQ-MFC). Some uncertainty underestimations were found in the high-quality multi-feature check (HQ-MFC). The very small uncertainty of the reference values for the HQ-MFC was likely the reason, as the denominator in the E_n expression was small.

The type B methods are about prediction of the uncertainty and hence subject to approximations. Thus, a more variable uncertainty estimation was expected. The results supported the successful validity of methods B1 and B2, even though the fraction of underestimations was slightly higher than desired 5 %.

5 Impact

The project website http://eucom-empir.eu was created and contains relevant information and updates on the project.

The project has disseminated it results to stakeholders via 9 open access publications in journals such as Metrology and Measurement Systems, Measurement: Sensors and euspen. The project was also presented 11 times at conferences such as IMEKO 2021, Mathematical and Statistical Modelling in Metrology and Virtual 3DMC 2020.

Furthermore the project has produced 3 press releases in Italy (i) CronacaTorino entitled EUCoM project, INRIM wants to help European manufacturing production (http://www.cronacatorino.it/scienza-tecnologia/progetto-eucom-inrim-vuole-aiutare-produzione-manifatturiera-europea.html), (ii) Sole24Ore-Scenari entitled The value of the uncertainties of the measures and (iii) MeteoWeb entitled The uncertainty that helps the manufacturing industry (http://www.meteoweb.eu/2018/08/lincertezza-che-aiuta-lindustria-manifatturiera/1143064/) as well as a fourth press release (iv) in metrology.news entitled EUCoM Project – Evaluating Uncertainty In Coordinate Measurement (https://metrology.news/eucom-project-evaluating-uncertainty-in-coordinate-measurement/)

Impact on industrial and other user communities

The results of the project will benefit companies performing inspections. The project has provided them with viable methods (Objectives 1 & 2) for evaluating uncertainty, that companies can use to make more reliable inspection-based decisions e.g. the acceptance or rejection of parts.

A stakeholder committee consisting of members from 10 companies from 6 European countries was established by the project. This included the Chief Stakeholder Škoda Auto a.s. (CZ), Hexagon Metrology SpA, Deltamu, ANGA, Capvidia, Kirchhof Automotive and AWE plc. Three stakeholders also became project collaborators and contributed to the validation campaign of Objective 3, these were Carl Zeiss, MG Spa and Cracow University of Technology.

A major method of disseminating the project's results was via the EUCoM seminars. An international plenary session in English was held as a webinar in June 2021 with 250+ attendees. Following this, ten national sessions were held from June to November 2021, one session for each country participating in the project. To overcome language barriers and widen the project's scope across Europe, sessions in specific countries were held in the national language. The plenary session focussed on the general project's findings, including the methods (Objectives 1& 2) and the validation campaign (Objective 3). The national sessions were devoted to Q&A and to sharing the host partner's practical experience in applying the project's methods and attracted between 15-100 participants to each session. The EUCoM seminars were a unique opportunity for widespread, coordinated training for industry and nearly all of the sessions were recorded and are available through the project website and via Zenodo (see the EUCoM Community page, https://zenodo.org/communities/17nrm-03/).

Further to this, five courses/workshops were hosted by the project for training for industrial stakeholders on

1. "Measurement uncertainty evaluation" in February 2019
2. "Measurement uncertainty" in April 2019
3. "Thread Gauge measurements and Uncertainy Calculation by using CMM" in October 2019
4. InTeRSeC 38 - Criteri di Massimo/Minimo Materiale (UNI EN ISO 2692) e regole decisionali per la verifica di conformità (UNI EN ISO 14253-1) in November 2019
5. "Unified system of limits and fits, dimensions tolerance" in November 2020.

Impact on the metrology and scientific communities

Evaluating and predicting the uncertainty of coordinate measurements is a recognised and long-standing scientific issue. The project's newly developed methods are a significant contribution to its solution and hence of benefit to the metrology and scientific communities.

The posteriori method A (Objective 1) is very practical but without a complete underpinning theory. Experts in the field recognise the potential of reversals but no detailed modelling of the actual capability has been attempted. Hence, the demonstration of the viability of method A in practice was a significant step forward (Objective 3).

The project's a priori methods B1 and B2 (Objective 2) have a sound theory that underpins them but require procedures that are unlikely to be accessible for average practitioners, thus simplifying approximations were developed by the project. Hence, the major scientific contribution from the project was the successful demonstration of such approximations being correct (Objective 3). Aside a simplification of the geometry error model, the method B1 introduced a novel spatial correlation scheme among points based on their mutual distances. Method, B2, pioneered the approach of disregarding the specific locations of the probed points in favour of an essential set with as many points as intrinsic degrees of freedom.

The validation campaign (Objective 3) was a unique opportunity for collecting data according to a plane deliberately intended for uncertainty evaluation purposes. The resulting raw data are an extremely valuable asset to the scientific community and are available for possible further developments on Zenodo at https://doi.org/10.5281/zenodo.6563144.

Coordinate measurements are instrumental for research in a variety of scientific fields. Thus, the project's methods (as published in open access journals) can provide scientists with guidance on how to make their coordinate measurements metrologically sound. The published papers (see list below) describe the method in detail.

Impact on relevant standards

The project has provided significant input and regular dissemination of its results to ISO/TC 213/WG 10. This has led to the initiation of the project ISO 15530-2, which will implement the project's method A (Objective 1). The WG 10 has also passed a resolution for future EN ISO 10360 standards to describe the performance of CMSs (*Coordinate Measuring Systems*) consistently based on a triple of unified metrological characteristics. This followed experimental evidence from the project and provides more suitable input values for the posteriori (type B) methods. The priori methods (Objective 2) are still under scrutiny by the WG 10, but the project hopes that they will become a future ISO 15530-5

Further to this, national standardisation bodies were also regularly informed of the project's results including the VDI/VDE-GMA FA 3.31 / DIN/NA 152-03-02-12 UA (DE), UNI/CT047 (IT) and its Working Groups GL1 and GL6, and the JSA ISO TC213 domestic response committee group B2 (JP).

Longer-term economic, social and environmental impacts

When a part or product is being inspected for acceptance, the uncertainty effectively competes with the manufacturing: given a certain tolerance, the larger the uncertainty, the larger the guard bands, and the narrower the acceptance zone left for production. Better uncertainty evaluations reduce conservative overestimation and result in more profit margin for industry.

More reliable uncertainty evaluations according to the EUCoM's methods–or even a simple evaluation in today's many cases when none is done at all–also improves risk management. The use of nonconforming parts is a risk for the consumer, with potential negative consequences such as faults in assembly lines, rejection and waste of complete products, loss of reputation to customers or to the market at large, disputes and even court cases. The producer's risk lies in the waste of conforming parts, with potential negative consequences such as loss of the production costs and of future sales, delays in further operation, and disputes with suppliers.

The reduction of false decisions leads to reduced waste too. In false rejections, conforming parts are wasted, including their raw materials and production energy, often resulting in extra transportation to withdraw and then reinstate the product, which is particularly problematic for heavy items. In false acceptances, faults in the assembly line results in a waste of energy (and time) to recover the items or to resolve the issue. Furthermore, wasting final products is always worse than wasting simpler constituting parts.

6 List of publications

[1]. W. Płowucha, *Point-plane distance as model for uncertainty evaluation of coordinate measurement*, Metrol. Meas. Syst., Vol. 27 (2020) No. 4, pp. 625-639, https://doi.org/10.24425/mms.2020.134843

[2]. F. Zanini, M. Sorgato, E. Savio, S. Carmignato, *Uncertainty of CT dimensional measurements performed on metal additively manufactured lattice structures*, 10th Conf. on Industrial Computed Tomography, Wels, AT (iCT 2020), https://www.ndt.net/article/ctc2020/papers/ICT2020_paper_id104.pdf

[3]. O. Sato, T. Takatsuji, Y.Miura, S. Nakanishi, *GD&T task specific measurement uncertainty evaluation for manufacturing floor*, Measurement: Sensors 18, 100141, (2021), https://doi.org/10.1016/j.measen.2021.100141

[4]. A. Forbes, *Approximate models of CMM behaviour and point cloud uncertainties*, Measurement: Sensors 18, 100304, (2021), https://doi.org/10.1016/j.measen.2021.100304

[5]. A. Forbes, *Generation of numerical artefacts incorporating spatially correlated form error*, Measurement: Sensors 18, 100302, (2021), https://doi.org/10.1016/j.measen.2021.100302

[6]. P. Rosner, M. Wojtyła, E. Gomez-Acedo, A. Balsamo, *Uncertainty evaluation for complex GPS characteristics*, Measurement: Sensors 18, 100323, (2021), https://doi.org/10.1016/j.measen.2021.100323

[7]. M. Wojtyła, P. Rosner, A. Forbes, E. Savio, A. Balsamo, *Verification of sensitivity analysis method of measurement uncertainty evaluation*, Measurement: Sensors 18, 100274, (2021), https://doi.org/10.1016/j.measen.2021.100274

[8]. F. Zanini, E. Savio, S. Carmignato, *Uncertainty determination of X-ray computed tomography dimensional measurements of additively manufactured metal lattice structures*, euspen's 21st International Conference & Exhibition, Copenhagen, DK, June 2021, https://www.euspen.eu/knowledge-base/ICE21150.pdf

[9]. A. Arscovic, M. Menoncin, E. Savio, *An approach to improve accuracy and productivity of industrial CMM measurements at high speed scanning*, euspen's 21st International Conference & Exhibition, Copenhagen, DK, 2021, https://www.euspen.eu/knowledge-base/ICE21306.pdf

This list is also available here: https://www.euramet.org/repository/research-publications-repository-link/

7 Contact details

Alessandro Balsamo, INRIM

Tel: +39 011 3919-970

E-mail: a.balsamo@inrim.it